Range Road RR5022, RR5026, RR5029 & RR5032

Saw Mill

Owner's Manual

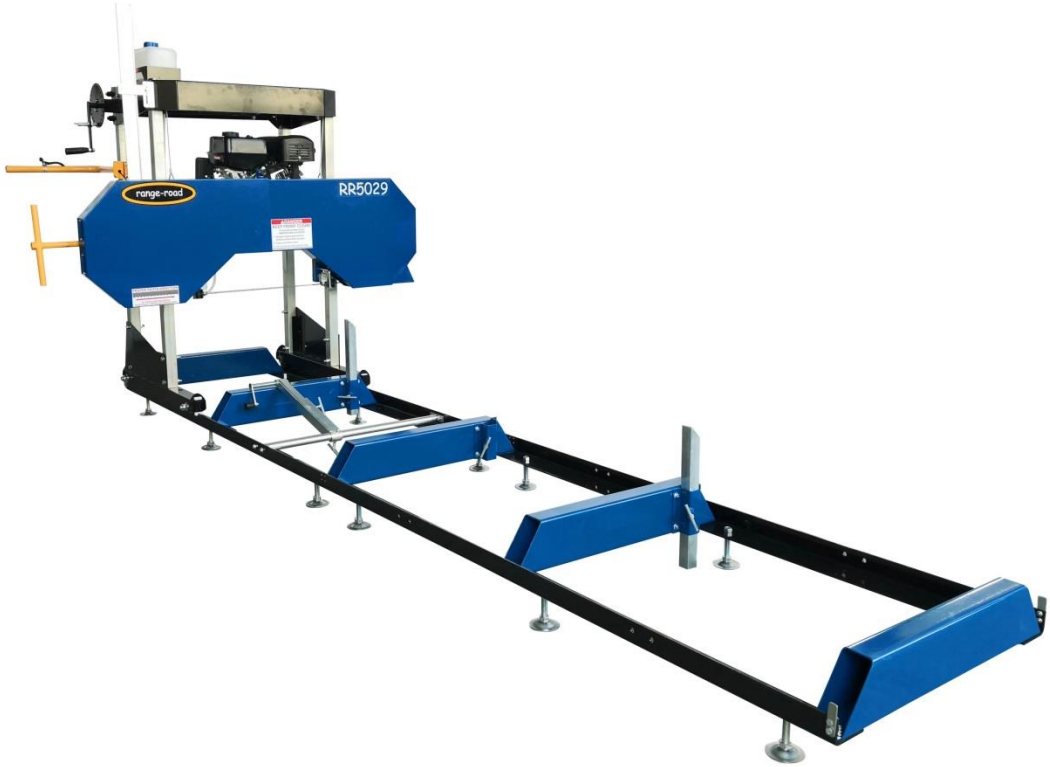

WARNING:

Read carefully and understand all **ASSEMBLY AND OPERATION INSTRUCTIONS** before operating. Failure to follow the safety rules and other basic safety precautions may result in serious personal injury.

Item#

RR5022A/B / R5026A / RR5029B / RR5032A/B

Range Road Enterprises Ltd
Box 944
Eckville AB T0M 0X0
www.range-road.ca

Thank you very much for choosing this product! For future reference, please complete the owner's record below:

Model: **RR_____** Purchase Date: _____

Save the receipt, warranty and these instructions. It is important that you read the entire manual to become familiar with this product before you begin using it.

This product is designed for certain applications only. The manufacturer cannot be responsible for issues arising from modification. We strongly recommend this product not be modified and/or used for any application other than that for which it was designed. If you have any questions relative to a particular application, DO NOT use the product until you have first contacted us to determine if it can or should be performed on the product.

For technical questions please visit www.range-road.ca or www.range-road.com.

INTENDED USE

The Range Road Saw Mill is portable and versatile which makes it a great tool for any lumber project. It has the capabilities of sawing logs up to 22", 26" or 29" in diameter, 7" thick and a cutting length of 125".

TECHNICAL SPECIFICATIONS

Model:	RR5022A/B	RR5026A	RR5029B	RR5032A/B
Capacity:	51cm (22") diameter, 17.5cm (7") thick, 315cm (124") in length	66cm (26") diameter, 16.5cm (6 ½") thick, 315cm (124") length	74cm (29") diameter, 16.5cm (6 ½") thick, 315cm (124") length	81cm (32") 16.5cm (6 ½") thick, 315cm (124") Length
Engine:	306cc (10Hp) Predator (RATO) or Briggs & Stratton	15HP Predator (RATO)	13.5HP Briggs & Stratton	14Hp Kohler CH440 or 22HP Predator (RATO)
Blade:	144 x 1-1/4 x .042	144 x 1-1/4 x .042	148 x 1-1/4 x .042	3973mm (156 ½") x 1-1/4" x .042
Dimensions:	4100mm x 1800mm x 1625mm (153 ½" x71"x64")	4100mmx1800mmx1968.5mm (153 ½" x70.87" x 77.5")	4100mmx1800mmx2169mm (153 ½" x70.87" x 66.85")	4100mmx1905mmx1969mm (153 ½" x 75" x 77 ½")

GENERAL SAFETY RULES

WARNING: Read and understand all instructions. Failure to follow all instructions listed below may result in serious injury.

CAUTION: Do not allow persons to operate or assemble this saw mill until they have read this manual and have developed a thorough understanding of how the saw mill works.

WARNING: The warnings, cautions, and instructions discussed in this instruction manual cannot cover all possible conditions or situations that could occur. It must be understood by the operator that common sense and caution are factors which cannot be built into this product, but must be supplied by the operator.

SAVE THESE INSTRUCTIONS

WORK AREA

⚠ Keep the work area clean**,** free of clutter. Cluttered and dark work areas can cause accidents.

⚠ Keep children and bystanders away while operating the saw mill. Distractions can cause you to lose control, so visitors should remain at a safe distance from the work area.

⚠ Be alert to your surroundings. Using a saw mill in confined work areas may put you dangerously close to rotating parts and the blade.

PERSONAL SAFETY

⚠ **Stay alert. W**atch what you are doing and use common sense when using a saw mill. Do not use a saw mill while you are tired or under the influence of drugs, alcohol or medication. Inattention while operating a saw mill may result in serious personal injury.

⚠ **Dress properly.** Do not wear loose clothing, dangling objects, or jewelry. Keep your hair, clothing and gloves away from moving parts. Loose clothes, jewelry or long hair can be caught in moving parts.

⚠ **Use safety apparel and equipment.** Use safety goggles or safety glasses with side shields which comply with current national standards, or when needed, a face shield. Use a dust mask if working in dusty work conditions. This applies to all persons in the work area. Also use non-skid safety shoes, hardhat, gloves, dust collection systems, and hearing protection when appropriate.

SAW MILL USE AND CARE

- **Do not modify the saw mill in any way.** Unauthorized modification may impair the function and/or safety and could affect the life of the equipment. There are specific applications for which the saw mill was designed.
- **Always check for damaged or worn parts before using the saw mill.** Broken parts will affect the saw mill operation. Replace or repair damaged or worn parts immediately.
- **Do not exceed the saw mill load capacity.**
- **Distribute the load evenly.** Uneven loads may cause the saw mill to tip, resulting in personal injury to the operator or others. Log should be secured before sawing.
- **Use the saw mill on flat and level surfaces** capable of supporting the saw mill and its maximum load.

  Pulling or pushing a load on a slanted or uneven surface can result in loss of control. The Saw mill needs to be on a flat and level surface before sawing.
- **Store idle saw mill.** When saw mill is not in use, store it in a secure place out of the reach of children.

  Inspect it for good working condition prior to storage and before re-use.

IMPORTANT SAFETY INFORMATION

WARNING! Read all instructions. Failure to follow all instructions listed below may result in fire, serious injury and/or DEATH. The warnings and precautions discussed in this manual cannot cover all possible conditions and situations that may occur. It must be understood by the operator that common sense and caution are factors which cannot be built into this product, but must be supplied by the operator.

SAVE THESE INSTRUCTIONS

Set Up Precautions.

1. Gasoline fuel and fumes are flammable, and potentially explosive. Use proper fuel storage and handling procedures. Do not store fuel or other flammable materials near the machine.
2. Have fire extinguishers nearby.
3. Operation of this equipment may create sparks that can start fires around brush and dry vegetation. A spark arrestor may be required. The operator should contact local fire agencies for laws or regulations relating to fire prevention requirements.
4. Set up and use only on a flat and level surface. Area must be well ventilated.
5. Wear ANSI-approved safety goggles, heavy-duty work gloves, and dust mask/respirator during set up.
6. Use only lubricants and fuel recommended in the engine manual or in the Specifications Chart of this manual.

Engine Precautions

Follow engine precautions and instructions in the included engine instruction manual.

Operating Precautions

CARBON MONOXIDE HAZARD

Using an engine indoors CAN KILL YOU IN MINUTES.

Engine exhaust contains carbon monoxide. This is a poison you cannot see or smell.

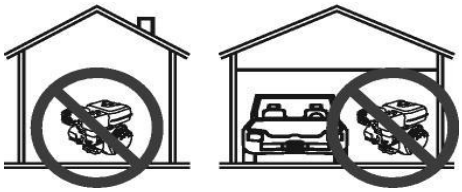

NEVER use gas engines indoors

EVEN IF doors and window are open.

Only use OUTSIDE and far away from windows, doors and vents.

Range Road Enterprises Ltd
Box 944
Eckville AB T0M 0X0
www.range-road.ca

1) Keep children and bystanders away from the equipment, especially during operation.
2) Do not leave the equipment unattended when it is running. Turn off the equipment (and remove safety keys, if available) before leaving the work area.
3) Wear ANSI-approved safety glasses, hearing protection, and NIOSH-approved dust mask/respirator under a full face shield during use. Wearing steel toe shoes is also recommended.
4) Wear heavy-duty work gloves when handling the blades.
5) People with pacemakers should consult their physician before use. Electromagnetic fields in close proximity to a heart pacemaker could cause pacemaker interference or pacemaker failure. Caution is necessary when near the engine's magneto or recoil starter.
6) Use only accessories that are recommended by Range Road for your model. Accessories that may be suitable for one piece of equipment may become hazardous when used on another piece of equipment.
7) Do not operate in explosive atmospheres, such as in the presence of flammable liquids, gases, or dust. Gasoline-powered engines may ignite the dust or fumes.
8) Stay alert, watch what you are doing and use common sense when operating this piece of equipment. Do not use this piece of equipment while tired or under the influence of drugs, alcohol or medication.
9) Do not overreach. Keep proper footing and balance at all times. This enables better control of the equipment in unexpected situations.
10) Dress properly. Do not wear loose clothing or jewelry. Keep hair, clothing and gloves away from moving parts. Loose clothes, jewelry or long hair can be caught in moving parts.
11) Parts, especially exhaust system components, get very hot during use. Stay clear of hot parts.
12) Do not cover the engine or equipment during operation.
13) Keep the equipment, engine, and work area clean at all times.
14) Use the equipment, accessories, etc., in accordance with these instructions and in the manner intended for the particular type of equipment, taking into account the working conditions and the work to be performed. Use of the equipment for operations different from those intended could result in a hazardous situation.
15) Do not operate the equipment with known leaks in the engine's fuel system.
16) WARNING: The brass components of this product contain lead, a chemical known to the State of California to cause birth defects (or other reproductive harm). (California Health & Safety code § 25249.5, *et seq.*)
17) WARNING: Some dust created by power sanding, sawing, grinding, drilling, and other construction activities, contains chemicals known [to the State of California] to cause cancer, birth defects or other reproductive harm. Some examples of these chemicals are:
    - Lead from lead-based paints
    - Crystalline silica from bricks and cement or other masonry products
    - Arsenic and chromium from chemically treated lumber

Your risk from these exposures varies, depending on how often you do this type of work. To reduce your exposure to these chemicals: work in a well ventilated area, and work with approved safety equipment, such as those dust masks that are specially designed to filter out microscopic particles. (California Health & Safety Code § 25249.5, *et seq.*)

18) This product contains or, when used, produces a chemical known to the State of California to cause cancer and birth defects or other reproductive harm. (California Health & Safety Code § 25249.5, *et seq.*)
19) When spills of fuel or oil occur, they must be cleaned up immediately. Dispose of fluids and cleaning materials as per any local, state or federal codes and regulations. Store oil rags in a bottom-ventilated, covered, metal container.
20) Keep hands and feet away from moving parts. Do not reach over or across equipment while operating.
21) Before use, check for misalignment or binding of moving parts, breakage of parts, and any other condition that my affect the equipment's operation. If damaged, have the equipment serviced before using. Many accidents are caused by poorly maintained equipment.
22) Use the correct equipment for the application. Do not modify the equipment and do not use the equipment for a purpose for which it is not intended.

Service Precautions

- Before servicing, maintenance or cleaning:
  - Turn the engine switch/key to its “OFF” position.
  - Allow the engine components to completely cool
- Always keep all safety guards in place and in proper working order. Safety guards can include muffler, air cleaner, mechanical guards and heat shields, among other guards.
- Wear approved safety goggles, heavy-duty gloves, and a dust mask/respirator during service.
- Maintain all labels on the saw mill. These show important information. If unreadable, missing or damaged, contact Range Road for a replacement.
- Have the equipment serviced by a qualified repair person using only OEM replacement parts. This will ensure that the safety of the saw mill is maintained. Do not attempt any service or maintenance procedures not explained in this manual or any procedures that you are uncertain of your ability to perform in a safe or correct manner.
- Store all equipment out of the reach of children.
- Follow scheduled engine and equipment maintenance.
- Refueling:
  - Do not smoke, or allow sparks, flames, or other sources of ignition around the equipment, especially when refueling.
  - Do not refill the fuel tank while the engine is running or hot.
  - Do not fill fuel tank to the top. Leave a little room for the fuel to expand as needed.
  - Refuel in a well-ventilated area only.

Specifications

Model:	RR5022A/B	RR5026A	RR5029B	RR5032A/B
Fuel Type	87+ octane unleaded	87+ octane unleaded	87+ octane unleaded	87+ octane unleaded
Fuel Capacity	5.4L (1.4 Gal) RATO 3L (.8 Gallon) B&S	6.5L (1.7 Gallon)	3.L (.8 Gallon)	9L (2.4 Gal) RATO 7.4L (1.95 Gal) Kohler
Coolant Tank Capacity	4L (4.2 Quarts)	4L (4.2 Quarts)	4L (4.2 Quarts)	6L (6.3 Quarts)
Blade Speed	3,150 FPM	3,150 FPM	3,150 FPM	3150 FPM
Log Diameter	56cm (22”) Maximum	66cm (26”) Maximum	74cm (29”) Maximum	81cm (32”) Maximum
Board Width	55cm (21.5”) Maximum	62cm (22 1/8”) Maximum	62cm (24 ½”) Maximum	72cm (28 ½”) Maximum
Cutting Thickness	18cm (7”) Maximum	16.5cm (6 ½”) Maximum	16.5cm (6 ½”) Maximum	18cm (7”) Maximum
Cutting Length	315cm(124”) Maximum without extensions	315cm (124”) Maximum without extensions	315cm (124”) Maximum without extensions	315cm (124”) Maximum without extensions

Note: Engine specifications are found in the engine manual supplied with this saw mill.

TO PREVENT SERIOUS INJURY:
Operate only with proper spark arrestor(s) installed. Operation of this equipment may create sparks that can start fires around dry vegetation and brush. A spark arrestor may be required.
The operator should contact local agencies for laws or regulations relating to fire prevention requirements.

Assembly

Read all of the safety precautions and warnings in this manual before setting up or using this product.

TO PREVENT SERIOUS INJURY: The Saw Mill can be dangerous if assembled incorrectly.
If you do not feel completely comfortable assembling it, please have a qualified technician assemble it.

Note: For any additional information regarding the saw mill parts, refer to Assembly Diagram near the end of this manual.

1) Open the package and carefully remove the Individual parts from the crate and organize on the floor. Leave the large head unit resting in the crate.

2) The two long boxes at the bottom of the crate are the rail parts. Open these boxes and you will see a small white box, open and take out the bolts and nuts for mounting the rails.

3) Place 2 guide rails on the floor and install 2 or 3 levelling feet in the large round holes on the bottom of each rail

4) Place the 2 rails on their levelling feet parallel to each other, the measurement from center to center:

- RR5022 & RR5026 845mm (33 3/8”)
- RR5029 902mm (35 ½”)
- RR5032 1008mm (39 11/16”)

For any Sawmill to cut square and straight all pieces have to be squared to each other and level. Use the adjusting feet to level one rail and then make sure the second rail is level with the first one.

Range Road Enterprises Ltd
Box 944
Eckville AB T0M 0X0
www.range-road.ca

5) Place the log support cross tubes on each end and put the bolts in snugly but do not tighten. The log support cross tube that the next rails will also attach to has 4 holes on each side, this rail will eventually be the center of the rails and it has a side pocket on it.

6) Check your width measurement again:

- RR5022 & RR5026 845mm (33 ¼”)
- RR5029 902mm (35 ½”)
- RR5032 1008mm (39 11/16”)

Range Road Enterprises Ltd
Box 944
Eckville AB T0M 0X0
www.range-road.ca

7) Do cross measurements now to make sure the rails are square to each other.

RR5022 & RR5026 - 2217mm (86 7/8”) across from either corner as shown
RR5029 - 2240mm (88 1/8”)
RR5032 - 2286mm (89 7/8”)

8) When the rails are square, tighten all 8 bolts in the log support cross tubes and recheck levelness and squareness, adjust as needed.

9) Mount and tighten centre log support cross tube.

10) Put the levelling feet on next 2 rails and put them in position at the centre log support cross tube.

11) When you have the rails level with the log support cross tube use clamps to hold the outer rails together.

12) Level one rail, then level the 2nd rail from it

13) Check to make sure rails are the correct distance apart at both ends and put on the end log support cross tube, do not tighten the bolts.

14) Cross measure new rails and adjust

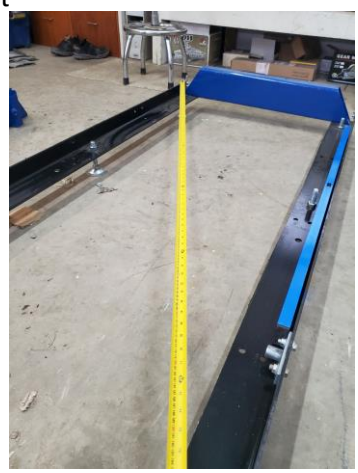

15) When rails are square and level tighten 8 bolts in log support cross tube, mount the centre log support cross tube and tighten it.

Re check levelness and cross measurements.

16) Take the 2 galvanized square posts (View 2 #25) with the pulleys on them and place them into the head unit square tubes, remove the bolts and pulleys, pay attention to where the pulley spacers go, place these to the side.

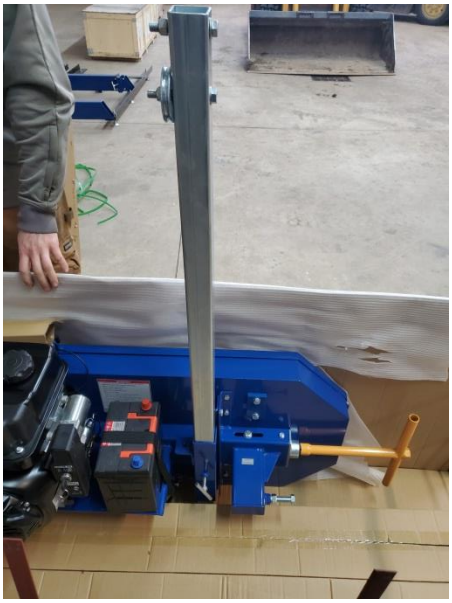

17) Cut the cardboard at the base of the tube so they can go through to the floor

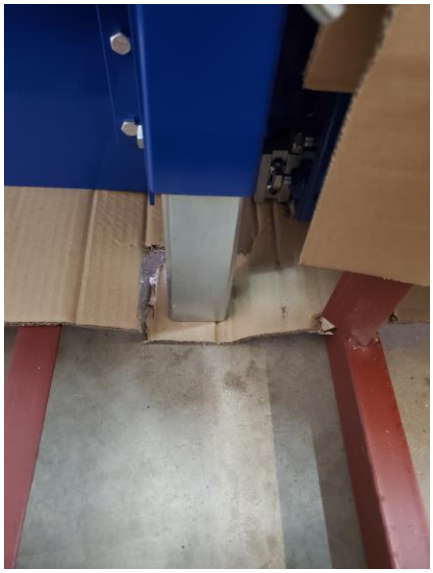

18) Tighten the T-handles to lock the tubes in place

19) Loosen the 4 corner bolts on the top frame

20) Place the top frame upside down and put the 2 galvanized corner posts in and tighten all 4 corner bolts

21) Tighten all 4 corner bolts to hold posts in place.

22) Lift and rotate the top frame so it is right side up and position it at head unit.

23) Put the back cover in position and put both bolts in on the side away from the water tank bracket.

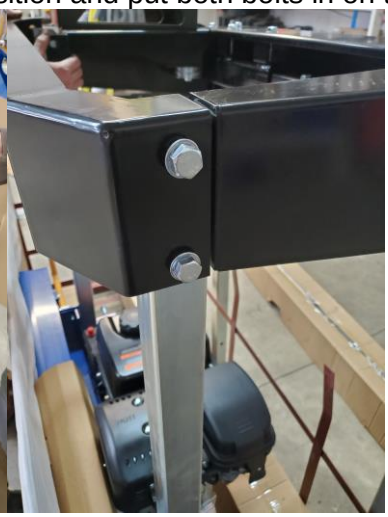

24) Put the back cover on the water tank side and put the bolts in

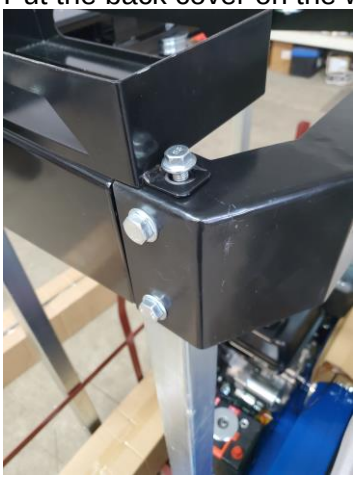

25) Place spacers and pulleys on bottom bolts, pulley circlips face the spacers, put nuts and washers on but do not tighten up.

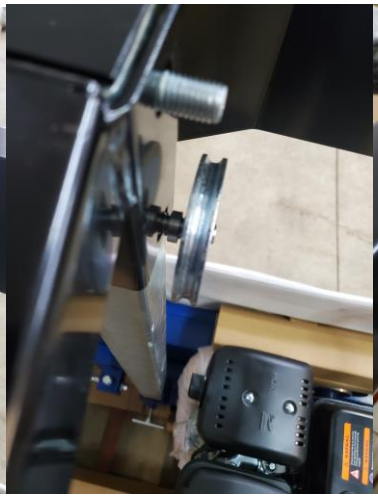

26) Lift complete head unit out of crate

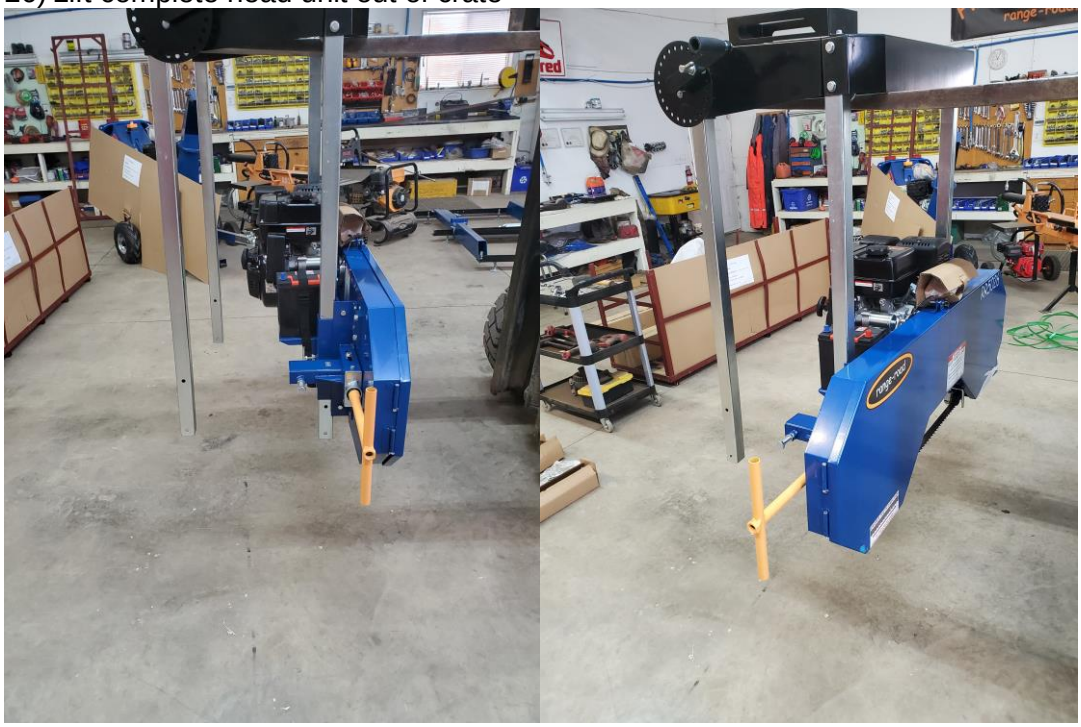

27) Mount left and right roller assemblies onto the galvanized tubes, snug bolts up but do not tighten them.

Range Road Enterprises Ltd
Box 944
Eckville AB T0M 0X0
www.range-road.ca

28) Position head unit over track and line rollers up so that the track sits in the roller groove, set head unit onto tracks.

29) Tighten all 8 bolts on roller frames

30) Tighten 8 bolts on top frame of head unit

Install roller stops at all 4 frame corners

31) Mount control handle at preferred working height on right hand post, making sure throttle cable is not twisted, tighten all 4 bolts.

32) Mount Scale bar, the metal spacer sits behind the bar at base where 2 bolts secure it.

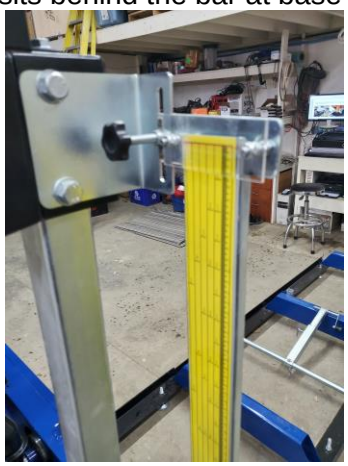

33) Tighten bolt in water tank mount bracket and put water tank in, the copper end on the water tank hose runs through the hole in the frame above the blade, loosen the 16mm bolt, put the copper tube through, aiming it towards the blade and snug the bolt up.

Range Road Enterprises Ltd
Box 944
Eckville AB T0M 0X0
www.range-road.ca

34) On the RR5032A Sawmill only, the fuel tank mounts on top on the opposite side as the water tank, The fuel tank frame bolts to the top of the sawmill with 4 bolts, the fuel tank itself does not bolt to the frame, it sits on the mount using the weight of the fuel to hold it in. The rubber grommets should be put in the tank holes, the 4 supplied bolts are not used.

35) Also on the RR5032A Sawmill only, the fuel line gets connected to the white filter on the side of the engine.

Range Road Enterprises Ltd
Box 944
Eckville AB T0M 0X0
www.range-road.ca

36) Support the head unit and undo the T-handles, gently lower the head unit so it sits unsupported on the posts.

37) Wind the lift handle so that the pulley arms are all the way in, then find the two stubs on the inside of the top plate behind the pulley arm, place a cable loop over 1 stub and run cable around pulleys and down to head unit.

38) Run threaded rod through the angle bracket on each side of the head unit and tighten the cables up.

Use handle to lift the head unit 152mm – 205mm (6” – 8”) and place a level on the top of blade cover, adjust cables until head is level. Measure distance from the blade log support on each side to double check that head unit is level.

39) Install log holder into frame rails, There are multiple frame holes for mounting, choose the one that works best for your application.

40) Install T-handles into track cross supports to hold the log supports in place, adjust bracket on head unit so that the blade is protected if the head is lower than the log support

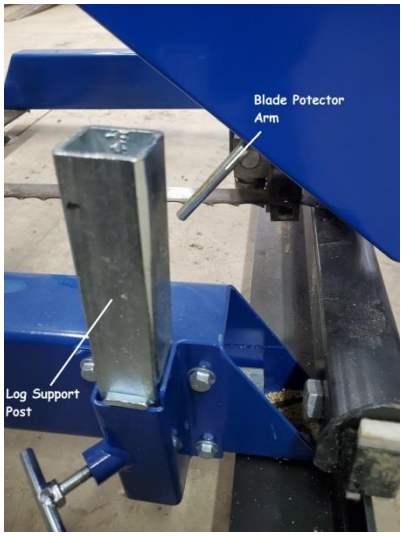

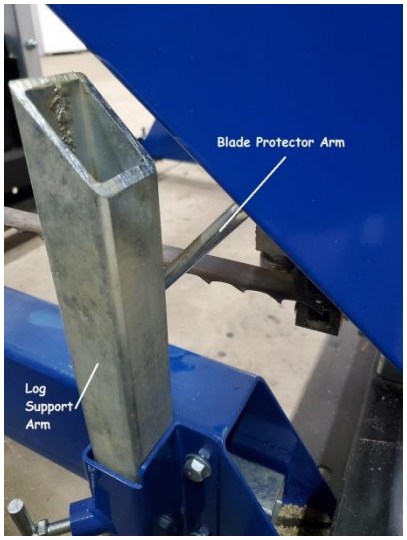

Range Road Enterprises Ltd
Box 944
Eckville AB T0M 0X0
www.range-road.ca

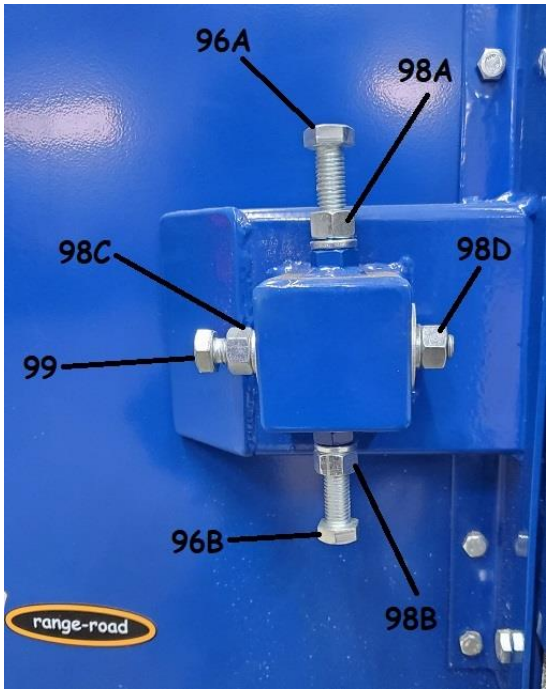

Figure P: Adjustment Bolts

NOTE: Adjust Blade again after replacement. Refer to Figure P for the following instructions: BEFORE any adjustment, loosen Bolts 96A and 96B and Nuts 98A and 98B.
If after replacement Blade starts to shift back towards operator, loosen Nut 98C and hold Bolt 99 with a wrench. Then tighten Nut 98C after adjustment.

Continue making small adjustments until the Blade stays centered. AFTER any adjustment, tighten Bolts 96A and 96B and nuts 98A and 98B.

41) Install Throttle control (40) on Push Handle (46) as shown in Figure Q.

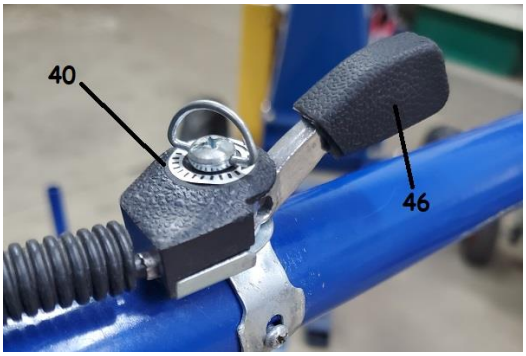

Figure Q: Throttle Control

For horizontal Blade adjustment, loosen the Nut (15) (see Assembly Diagram) and adjust the left and right Cable. Anchor Bolts (159) until the distance between the ends of the Blade and the top of the Middle Support (8) are the same as shown in Figure S.

NOTE: Use a tape measure to verify distances.

Figure S: Blade Adjustment

OPERATING INSTRUCTIONS

Read all of the safety precautions and warnings in this manual before setting up or using this product.

Engine Operation

Inspect engine and equipment looking for damaged, loose or missing parts before operating. If any problems are found, do not use equipment until fixed properly.

Start Procedure

Before starting the engine:

A) Follow the Set Up Instructions to prepare the equipment. Follow all instructions in the separate engine manual provided with the engine.
B) Inspect the equipment and engine.
C) Fill the engine with the proper amount and type of fuel and oil.
D) Read the Equipment Operation section that follows

1. Start and operate the engine according to the provided engine manual.
2. Replacement engine operating instructions can be obtained from the engine manufacturer.

Equipment Operation

1. Wear heavy-duty work gloves, ANSI-approved goggles behind a full face shield, steel-toed work boots, and a dust mask.
2. Operate only with the assistance of another qualified person.
3. Fill the Water Tank with clean water.
4. The maximum log diameter that can be cut is 66cm (26") on the RR5026A or 74cm (29") on the RR5029B. The maximum board width that can be cut is 56cm (22 1/8") on the RR5026A and 62cm (24 ½") on the RR5029B. The log must be at least 112cm (3' 8") long and must rest on at least two Supports (8, 12) to prevent instability.
5. Cut branches off the log to be processed before sawing.
6. Do not cut logs containing foreign objects (nails, metal, etc.). This will cause Blade damage and could cause serious injury.
7. Choose the Short Log Supports (9) or the Long Log Supports (10) according to the log diameter.
8. Place the log to be cut on the Supports. See Figure T. Brace the log against the Log Supports (9 or 10) to prevent movement during sawing. The log should be positioned so that the force of cutting holds it against the supports. Log supports (9 or 10) need to be lower than the thickness of the board being cut to avoid blade damage.

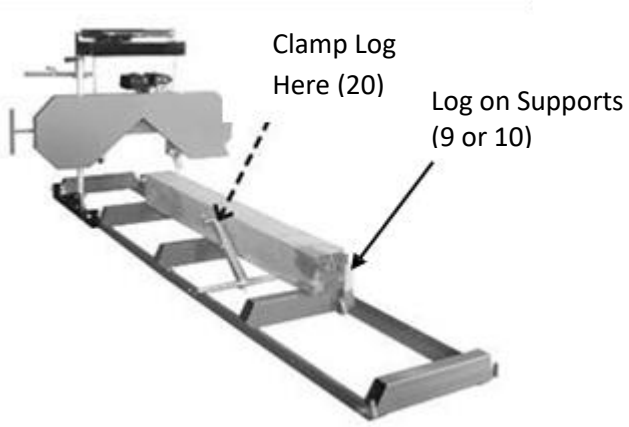

Figure T: Lumber Position

9. Clamp the log in place against the Log Supports (9 or 10) using the Log Clamp Assembly (20) in the location shown in Figure T.
10. Tighten all Bolts and T-Handles on the Log Clamp Assembly (20) and the Log Supports (10 or 9). Verify that they are securely in place before proceeding.

NOTE: Make sure the Log Clamp Assembly (20) does NOT interfere with the Saw Blade when sawing. The Log Clamp Assembly (20) should be lower than the Saw Blade at all times.

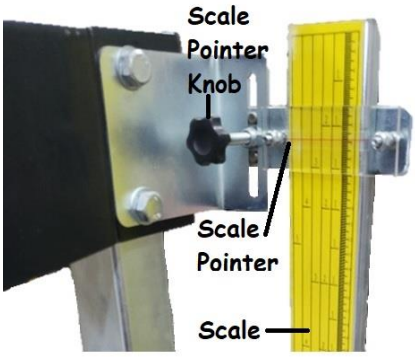

Figure U: Scale and Scale Pointer

11. Align the cutting Blade with the top of the log, loosen the Scale Pointer Knob and adjust the Scale Pointer to point at a starting mark on the Scale. Tighten the Scale Pointer Knob.
12. Release both T-Handles (18). Turn the Height Adjustment Handle (131) and lower the cutting height until the Scale Pointer points to the desired thickness. Tighten both T-Handles (18).
13. The cut direction must be as shown below. If the log is cut from the other direction, the saw blade will push the log away from the supports and may cause the log to become unstable.

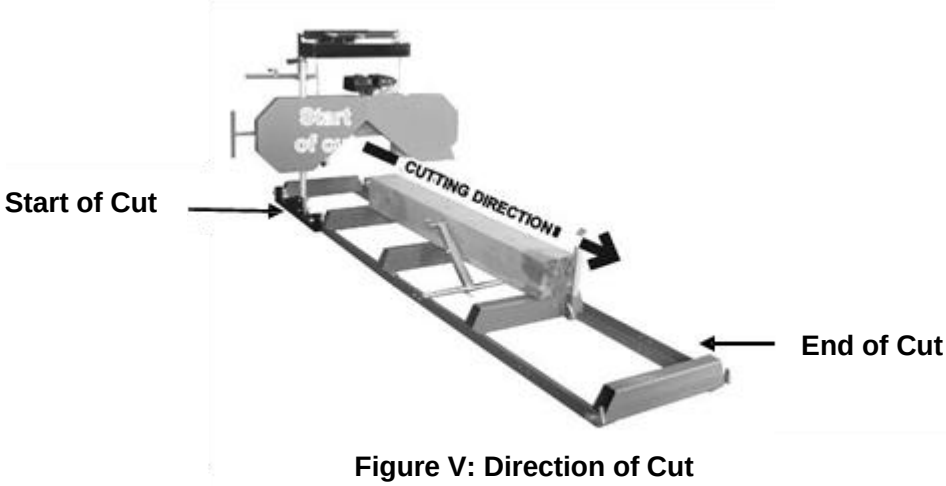

Figure V: Direction of Cut

14. WARNING! All operators must stay clear of the front and back of the blade whenever the engine is running.
15. Start and operate the engine according to the provided engine manual.
16. Adjust the Throttle to bring the Blade up to speed. The Locking Ring can be turned to lock the throttle in place.

Figure W: Throttle Control

17. Throttle speed may need to be increased when the Saw is under load.

18. Move the Saw Head slowly along the track and against the log to make the cut.

NOTE: Repeated adjustments will need to be made during cutting.

19. Shut off the engine if the blade binds, breaks, or another problem is suspected. Do not try to back the blade out of the log while engine is running.
20. Trim off the rounded sides of the lumber
21. After the log is squared-off, boards or posts can be cut.
22. To prevent accidents, turn off the engine and disconnect the spark plug wire after use. Wait for the engine to cool, clean external parts with clean cloth, then store the equipment out of children's reach according to the Store Instructions in the Engine Manual.

Servicing

⚠WARNING

TO PREVENT SERIOUS INJURY FROM ACCIDENTAL STARTING:
Turn the power Switch of the equipment to its "OFF" position and wait for the engine to cool before performing any inspection, maintenance or cleaning procedures.

TO PREVENT SERIOUS INJURY FROM EQUIPMENT FAILURE:
Do not use damaged equipment. If abnormal noise, vibration or excess smoking occurs, have the problem corrected before further use.

Maintenance Procedures

Many maintenance procedures, including those not detailed in this manual, will need to be performed by a qualified technician for safety. If you have any doubts about your ability to safely service the equipment or engine, have a qualified technician service the equipment.

NOTE: These procedures are in addition to the regular checks and maintenance explained as part of the regular operation of the engine and equipment.

Engine Maintenance and Service
Follow the instructions found in the included engine manual.

Equipment Lubrication
1. Lubricate the Band Wheel Axles, Square and Round Posts with machine oil before each use.
2. Lubricate the Tension Handle with grease monthly or as needed.

Storage
1. Wait for engine to cool, then clean equipment with clean cloth.
2. Clean the engine and/or prepare it for storage according to engine manual instructions.
3. Apply a thin coat of rust preventive oil to all uncoated metal parts.
4. Cover and store in dry, well-ventilated area out of reach of children.
5. For cold weather operation, store the equipment in a cool dry area to prevent condensation and premature wear.

Equipment Troubleshooting

Excessive Blade Breakage	1. Insufficient blade tension. 2. Incorrect speed or feed rate. 3. Log loose. 4. Blade rubs against wheel flange. 5. Blade teeth too coarse for log, or blade too thick 6. Teeth contacting lumber before blade up to full speed. 7. Misaligned guides.	1. Increase blade tension. 2. Adjust speed or feed rate for the lumber being cut. 3. Make sure log is securely positioned against supports. Remove stray branches that prevent proper positioning. 4. Adjust blade tracking. 5. Use recommended blade only. 6. Allow blade to reach operating speed before cutting. 7. Align guides.
Premature blade dulling.	1. Teeth too coarse. 2. Blade rotating too quickly. 3. Hard spots or scale in/on material. 4. Blade installed backwards. 5. Insufficient blade tension. 6. Metal or other objects in the logs.	1. Use recommended blade only. 2. Use lower speed. 3. Reduce speed, increase feed pressure. 4. Properly install blade. 5. Tension blade properly. 6. Remove metal or object
Blade cuts crooked	1. Log not square. 2. Feed pressure/rate too great. 3. Inadequate blade tension. 4. Dull blade. 5. Blade guide loose. 6. Insufficient blade tension.	1. Adjust log so that it is square with the blade. 2. Reduce feed rate. 3. Increase blade tension slightly. 4. Replace blade. 5. Adjust and secure blade guide. 6. Tension blade properly
Blade cuts rough.	1. Too much blade speed and/ or rate of feed. 2. Blade is too coarse.	1. Reduce blade speed and feed rate. 2. Use recommended blade only.
Blade is twisting.	1. Cut is binding blade. 2. Blade tension too high.	1. Decrease feed pressure. 2. Decrease blade tension.
Unusual wear on back or side of blade.	1. Blade guides worn. 2. Blade guide bearing bracket is loose.	1. Replace blade guides. 2. Tighten blade guide bearing bracket.
Teeth ripping from blade.	1. Teeth too coarse. 2. Feed rate incorrect. 3. Log loose. 4. Teeth filled with debris.	1. Use recommended blade only. 2. Adjust feed rate. 3. Make sure log is securely positioned against supports. Remove stray branches that prevent proper positioning. 4. Clean debris off blade.

Follow all safety precautions whenever diagnosing or servicing the equipment or engine.

Parts List

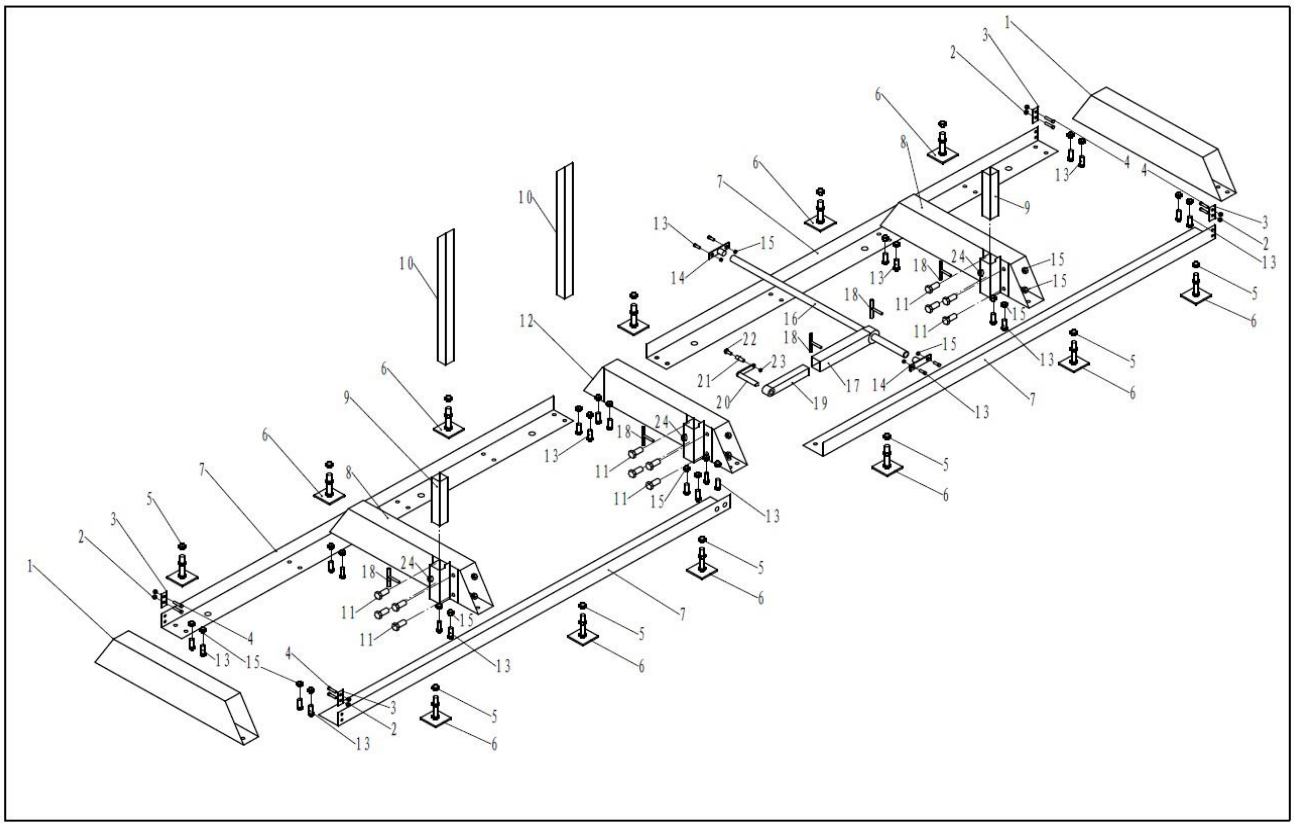

Range Road Enterprises Ltd
Box 944
Eckville AB T0M 0X0
www.range-road.ca

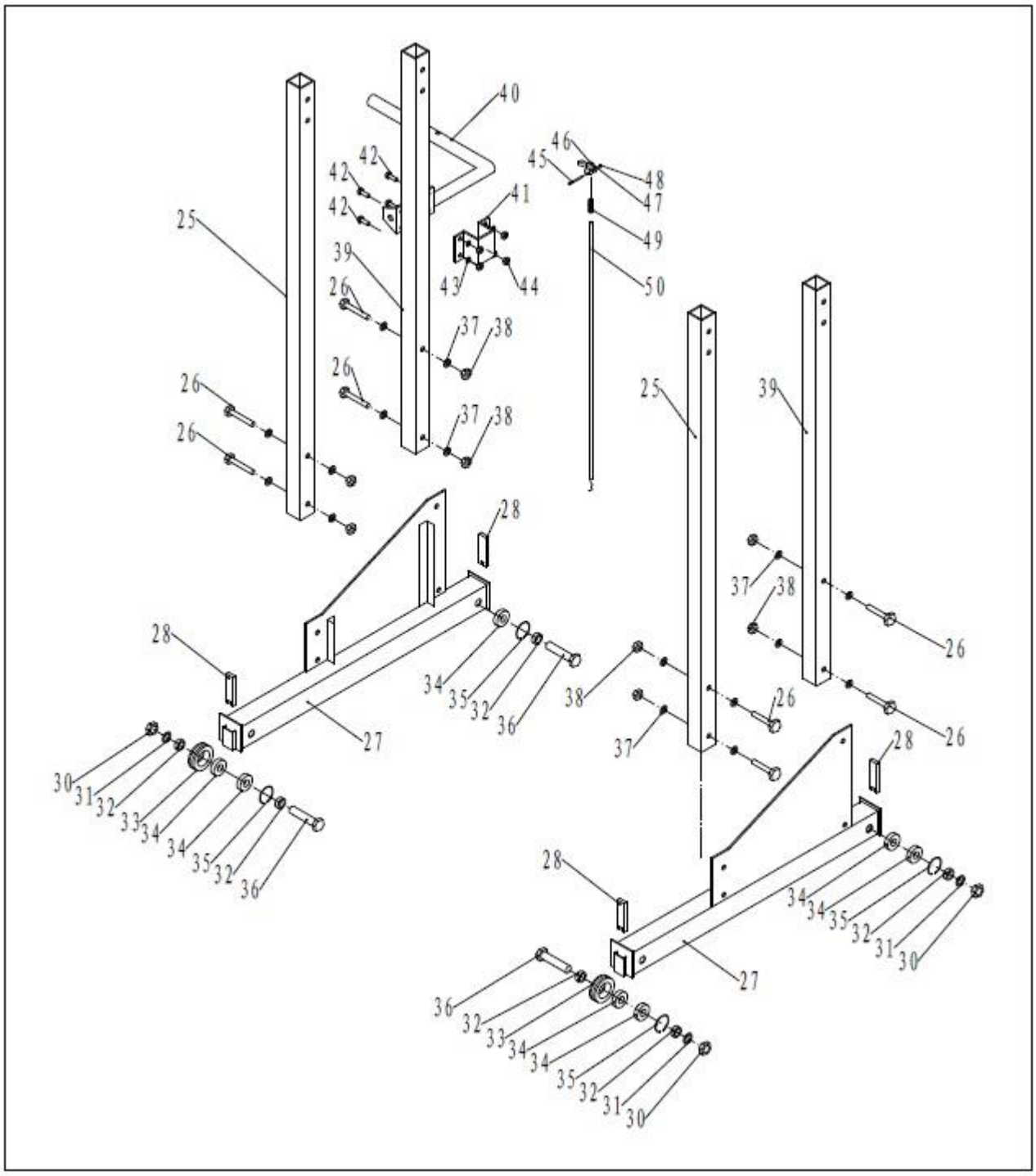

Range Road Enterprises Ltd
Box 944
Eckville AB T0M 0X0
www.range-road.ca

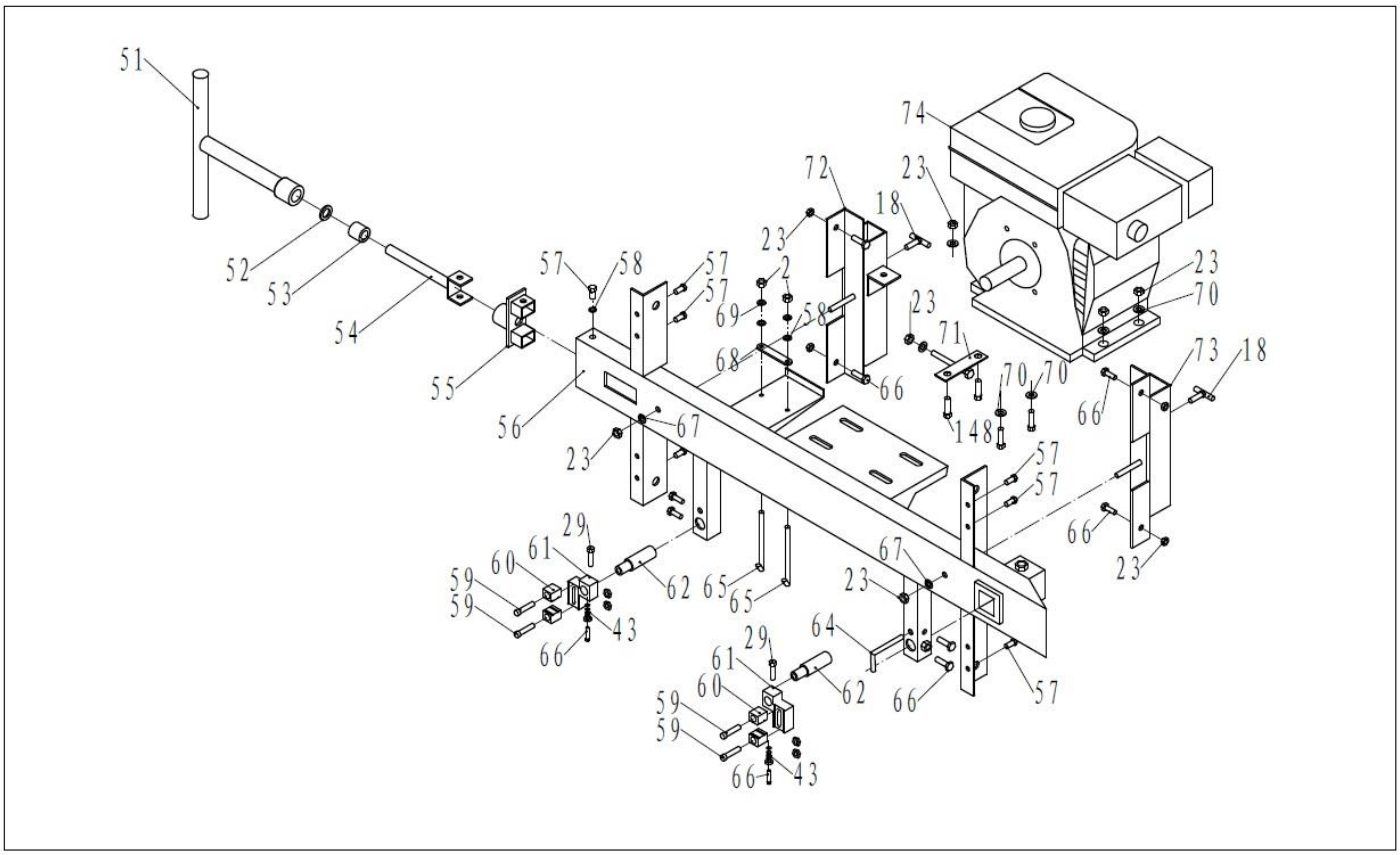

Range Road Enterprises Ltd
Box 944
Eckville AB T0M 0X0
www.range-road.ca

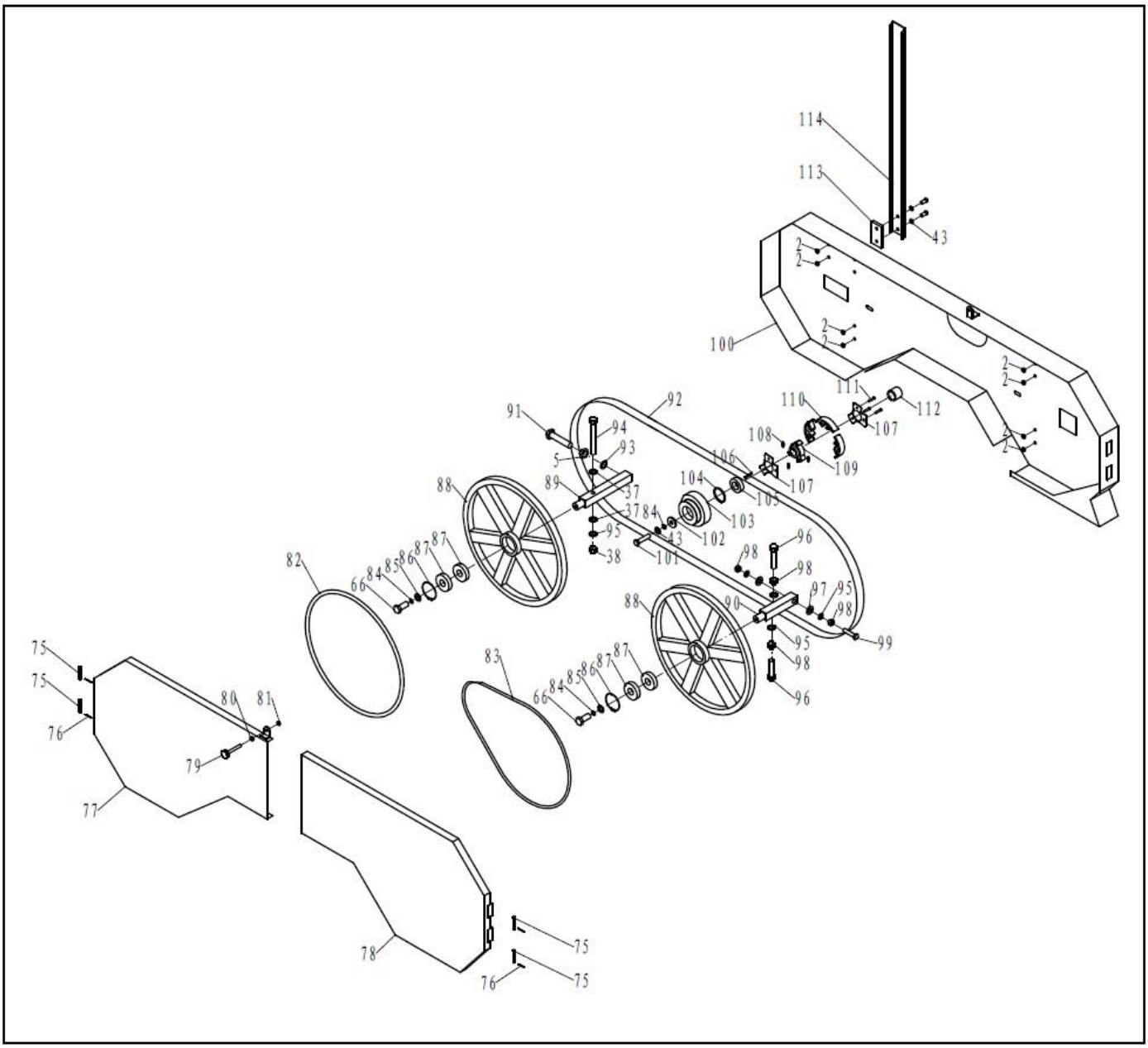

Range Road Enterprises Ltd
Box 944
Eckville AB T0M 0X0
www.range-road.ca

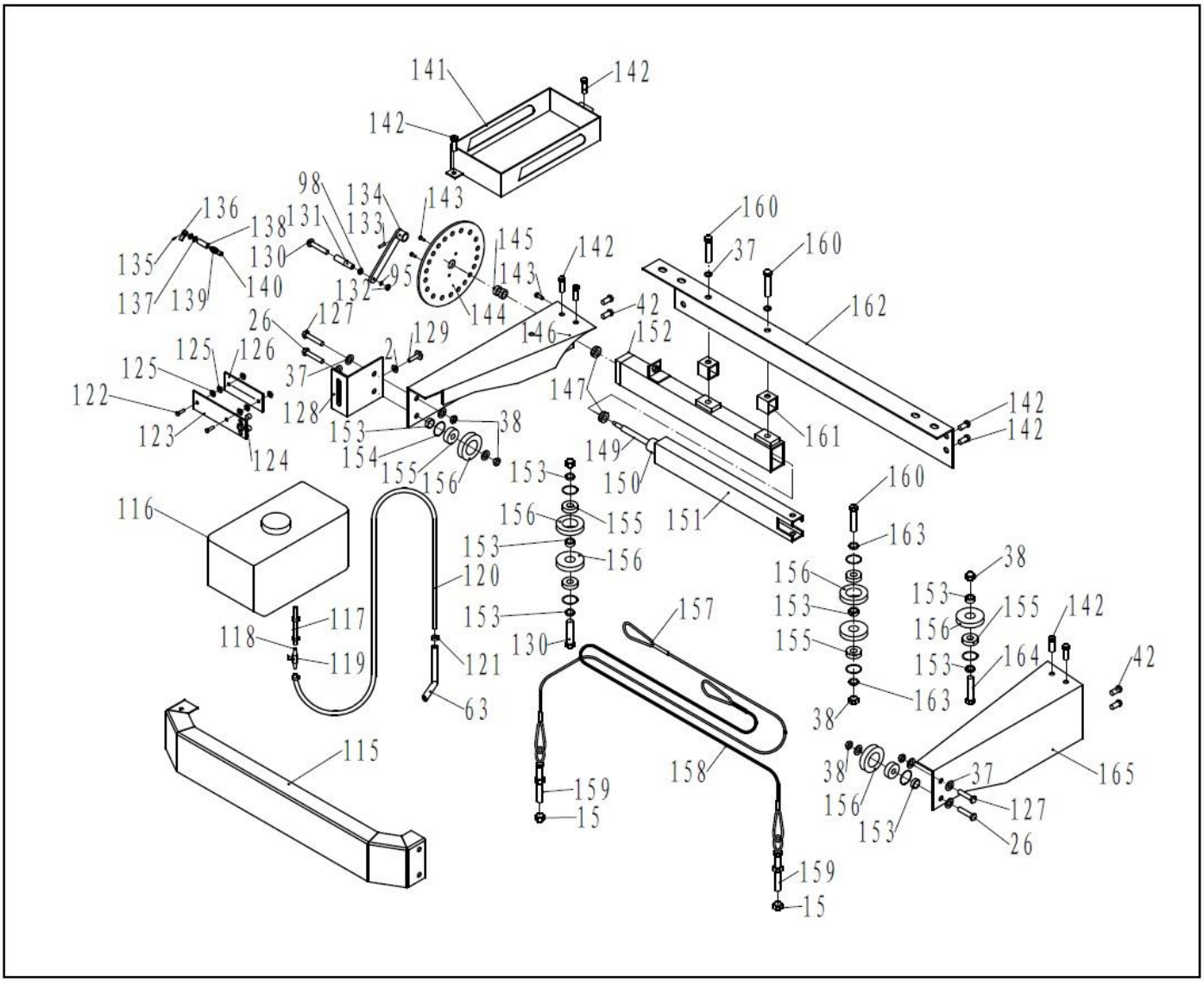

Range Road Enterprises Ltd
Box 944
Eckville AB T0M 0X0
www.range-road.ca

PLEASE READ THE FOLLOWING CAREFULLY

The Manufacturer and/or Distributor has provided the parts list and assembly diagram in this manual as a reference tool only. Neither the Manufacturer nor Distributor makes any representation or warranty of any kind to the buyer that he or she is qualified to make any repairs to the product, or that he or she is qualified to replace any parts of the product. In fact, the Manufacturer and/or Distributor expressly states that all repairs and parts replacements should be undertaken by certified and licensed technicians, and not by the buyer. The buyer assumes all risk and liability arising out of his or her repairs to the original product or replacement parts thereto, or arising out of his or her installation of replacement parts thereto.

Note: Some parts are listed and shown for illustration purposed only, and are not available individually as replacement parts.

WARRANTY

One-year limited warranty

For technical questions, please visit www.range-road.ca or www.range-road.com

Range Road Enterprises Ltd
Box 944
Eckville AB T0M 0X0
www.range-road.ca